Work Order ID 73241

Friday, August 26, 2011 10:29:35 AM

Item ID: D3808-041 **Accept** **Setup Start** **Stop**

Revision ID:

Item Name: Seat Rail Assembly

Start Date: 8/26/2011 **Start Qty:** ~~2~~ 1.00 **Cust Item ID:**

Required Date: 9/9/2011 **Req'd Qty:** 2.00 **Customer:**

Reference:

Approvals: **Process Plan:** CY **Date:** 11/08/24 **Tooling:** _____ **Date:** _____ **Run Start** **Stop**

QC: _____ **Date:** _____ **SPC (Y/N):** _____ **Date:** _____

Sequence ID/ Work Center ID	Operation Description	Set Up/ Run Hours	Tool ID	Tool #	Plan Code	Accept Qty	Reject Qty	Reject Number	Insp. Stamp
Draw Nbr	**Revision Nbr**								
D3808	Rev A								
100 Small Fab	Small Fab	0.00							
	Memo	0.00							
	1-Install Plunger as per Dwg D3808.□2-Install helicoils x5 as per Dwg D3808.								
110 QC Quality Control	QC5- Inspect part completeness to step on W/O	0.00							
	Memo	0.00							
120 Packaging Packaging	Identify as per dwg & Stock Location: ST262.	0.00							
	Memo	0.00							

Dart Aerospace Ltd

W/O:		WORK ORDER CHANGES					
DATE	STEP	PROCEDURE CHANGE	By	Date	Qty	Approval Chief Eng / Prod Mgr	Approval QC Inspector

Part No: _____ **PAR #:** _____ **Fault Category:** _____ **NCR:** Yes No **DQA:** _____ **Date:** _____

Resolution: _____ **Disposition:** _____ **QA: N/C Closed:** _____ **Date:** _____

NCR:		WORK ORDER NON-CONFORMANCE (NCR)						
DATE	STEP	Description of NC Section A	Corrective Action Section B			Verification Section C	Approval Chief Eng	Approval QC Inspector
			Initial Chief Eng	Action Description Chief Eng	Sign & Date			

NOTE: Date & initial all entries

Work Order ID 73241

Friday, August 26, 2011 10:29:35 AM

Item ID: D3808-041 **Accept** **Setup Start**

Revision ID:

Item Name: Seat Rail Assembly **Stop**

Start Date: 8/26/2011 **Start Qty:** 2.00 **Cust Item ID:**

Required Date: 9/9/2011 **Req'd Qty:** 2.00 **Customer:**

Reference:

Approvals: **Process Plan:** _____ **Date:** _____ **Tooling:** _____ **Date:** _____ **Run Start**

QC: _____ **Date:** _____ **SPC (Y/N):** _____ **Date:** _____ **Stop**

Sequence ID/ Work Center ID	Operation Description	Set Up/ Run Hours	Tool ID	Tool #	Plan Code	Accept Qty	Reject Qty	Reject Number	Insp. Stamp
130	QC21- Final Inspection - Work Order Release	0.00						11/8/30	
QC Quality Control	**Memo**	0.00							

MF 11-08-30

Dart Aerospace Ltd

W/O:		WORK ORDER CHANGES					
DATE	STEP	PROCEDURE CHANGE	By	Date	Qty	Approval Chief Eng / Prod Mgr	Approval QC Inspector

Part No: _____ **PAR #:** _____ **Fault Category:** _____ **NCR:** Yes No **DQA:** _____ **Date:** _____

Resolution: _____ **Disposition:** _____ **QA: N/C Closed:** _____ **Date:** _____

NCR:		WORK ORDER NON-CONFORMANCE (NCR)						
DATE	STEP	Description of NC Section A	Corrective Action Section B			Verification Section C	Approval Chief Eng	Approval QC Inspector
			Initial Chief Eng	Action Description Chief Eng	Sign & Date			

NOTE: Date & initial all entries

H:\fFORMS\Quality Assurance\approved QA\NCRWO RevE

Picklist Print

Friday, August 26, 2011 10:29:33 AM

Work Order ID: 73241

Parent Item: D3808-041

Parent Item Name: Seat Rail Assembly

Start Date: 8/26/2011 **Required Date:** 9/9/2011

Start Qty: 2.00 **Required Qty:** 2.00

Comments: IPP Rev:A New Issue 08-07-31 JLM Verified By:DD

Component Item ID/ Item Name	Replacement Item ID	Mfg/ Purch	Bin Item	Primary Location	Last Location	Route Seq ID	Unit of Measure	Qty on Hand	Qty per Kit	Total Qty	Qty Issued	Date Issued	Status
D3808-1		Manufactured	No			100	Each	4.0000	1	2			
Seat Rail													
				Location			**Loc Qty**		**Loc Code**				
				ST262			4						
					71150		4						
D3810-1		Manufactured	No			100	Each	11.0000	1	2			
Hand Retractable Spring Plunger													
				Location			**Loc Qty**		**Loc Code**				
				ST084			11						
					57319		11						
MS21209C0815		Purchased	No			100	Each	8.0000	4	8			
Heli Coil, screw locking, red													
				Location			**Loc Qty**		**Loc Code**				
				ST304			8						
					118159		8						
MS21209C6-10		Purchased	No			100	Each	21.0000	1	2			
Heli Coil, screw locking, red													
				Location			**Loc Qty**		**Loc Code**				
				ST304			21						
					108847		21						

Dart Aerospace Ltd

W/O:		WORK ORDER CHANGES					
DATE	STEP	PROCEDURE CHANGE	By	Date	Qty	Approval Chief Eng / Prod Mgr	Approval QC Inspector

Part No: _____ **PAR #:** _____ **Fault Category:** _____ **NCR:** Yes No **DQA:** _____ **Date:** _____

Resolution: _____ **Disposition:** _____ **QA: N/C Closed:** _____ **Date:** _____

NCR:		WORK ORDER NON-CONFORMANCE (NCR)						
DATE	STEP	Description of NC Section A	Corrective Action Section B			Verification Section C	Approval Chief Eng	Approval QC Inspector
			Initial Chief Eng	Action Description Chief Eng	Sign & Date			

NOTE: Date & initial all entries

H:\fFORMS\Quality Assurance\approved QA\NCRWO RevE

QTY -041	P/N	DESCRIPTION
X	D3808-041	SEAT RAIL ASSY
1	D3808-1	SEAT RAIL
1	D3810-1	HAND RETRACTABLE SPRING PLUNGER
1	MS21209C6-10	HELI-COIL, SCREW LOCKING (RED)
4	MS21209C0815	HELI-COIL, SCREW LOCKING (RED)

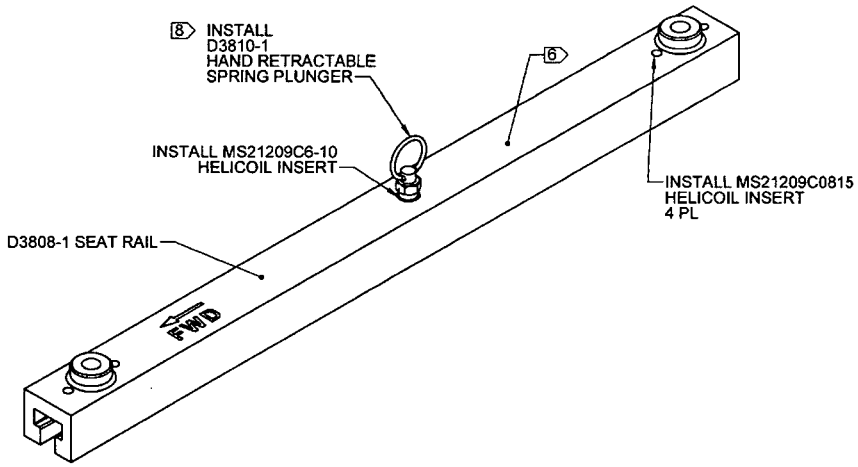

D3808-041 SEAT RAIL ASSEMBLY

SHOP COPY
RETURN TO
ENGINEERING
UNCONTROLLED
SUBJECT TO AMENDMENT
WITHOUT NOTICE
WORK ORDER
NO. 73241
CL 11/08/24

RELEASED
08.09.30

D3808-041 NOTES:
1) MATERIAL: N/A
2) FINISH: N/A
3) TOLERANCES: PER DART QSI 018 UNLESS OTHERWISE NOTED
4) UNITS: INCHES UNLESS OTHERWISE NOTED
5) BREAK SHARP EDGES: N/A
6) IDENTIFICATION: IDENTIFY WITH DART P/N D3808-041 USING FINE POINT PERMANENT INK MARKER AS SHOWN
7) WEIGHT: 0.80 lbs
8) INSTALL D3810-1 INTO D3808-1 ONLY UNTIL NO THREADS VISIBLE ON D3810-1

REV.	DESCRIPTION	BY	DATE
A	NEW ISSUE	RF	08.08.08

DESIGN	RF	DART AEROSPACE LTD HAWKESBURY, ONTARIO, CANADA
DRAWN	RF	
CHECKED		DRAWING NO. D3808 — REV. A — SHEET 1 OF 2
MFG. APPR.		
APPROVED		TITLE: SEAT RAIL ASSEMBLY — SCALE: NTS
DE APPR.		
DATE	08.08.08	

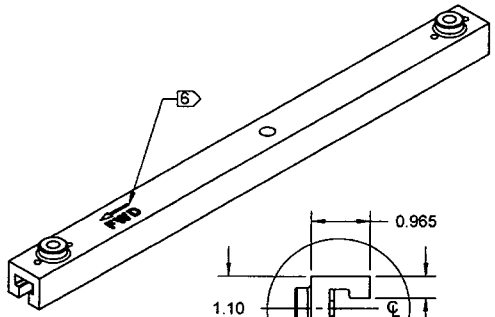

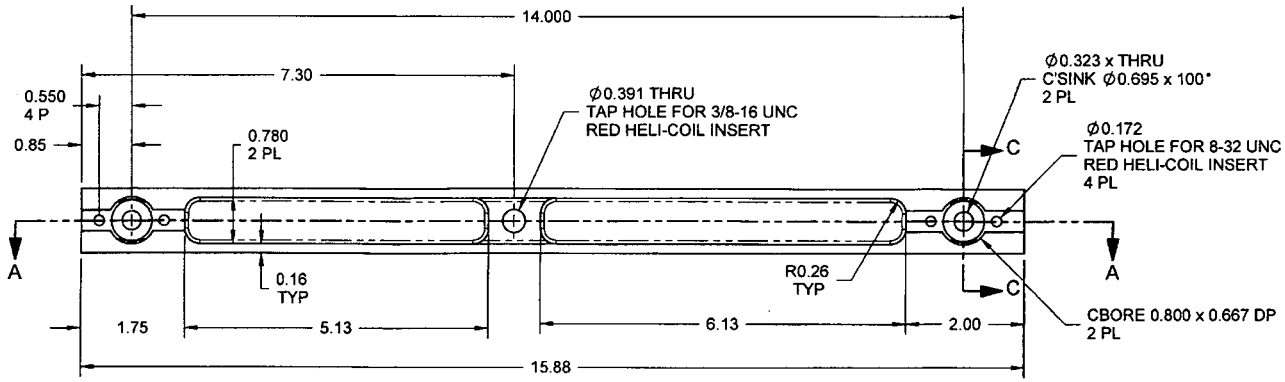

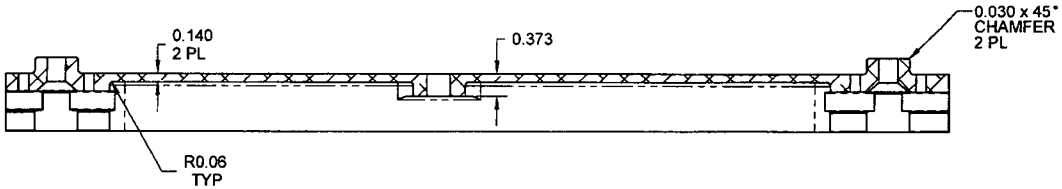

SECTION A-A

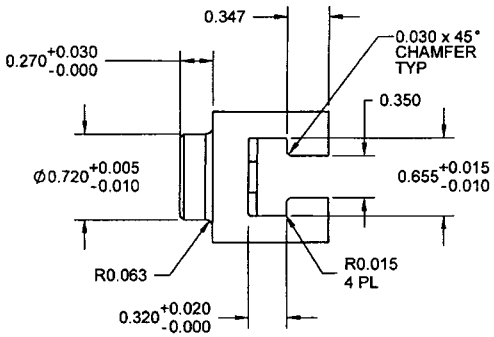

DETAIL VIEW B

D3808-1 SEAT RAIL

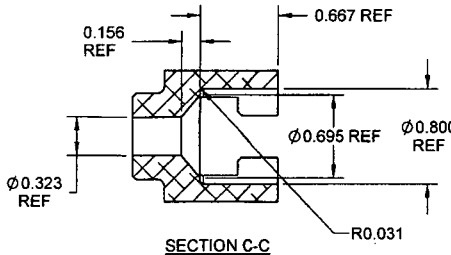

SECTION C-C

RELEASED

NOTES:
1) MATERIAL: 6061-T6 (OR T651/T6510/T6511/T62) ALUMINUM BAR PER
AMS-QQ-A-200/8 (OR AMS 4160) OR AMS-QQ-A-225/8 (OR AMS 4117/4128/4115/4116)
(REF. DART SPEC. M6061T6B)
2) FINISH: CHEMICAL CONVERSION COAT PER DART QSI 005 4.1
3) TOLERANCES: PER DART QSI 018 UNLESS OTHERWISE NOTED
4) UNITS: INCHES UNLESS OTHERWISE NOTED
5) BREAK SHARP EDGES: 0.005 TO 0.010 MAX
6) IDENTIFICATION: ENGRAVE ARROW & FWD AS SHOWN USING 0.30 HIGH LETTERS TO MAX DEPTH OF 0.005
7) WEIGHT: 0.768 lbs

DESIGN	RF	**DART AEROSPACE LTD** HAWKESBURY, ONTARIO, CANADA
DRAWN	RF	
CHECKED		DRAWING NO. D3808 — REV. A — SHEET 2 OF 2
MFG. APPR.		
APPROVED		TITLE: SEAT RAIL ASSEMBLY — SCALE: NTS
DE APPR.		
DATE	08.08.08	